DE GRUYTER OPEN

Int. J. of Applied Mechanics and Engineering, 2016, vol.21, No.2, pp.261-271
DOI: 10.1515/ijame-2016-0016

SPECIFICATION OF THE PROCESS OF CHLORIDE EXTRACTION FROM REINFORCED CONCRETE BASED ON THE INVERSE TASK OF THE DIFFUSION EQUATION

A. ALSABRY*
University of Zielona Góra
Prof. Szafrana 1 Str.
65-516 Zielona Góra, POLAND
E-mail: a.alsabry@wp.pl

A. ZYBURA
Silesian University of Technology
Gliwice, POLAND

When the structure of reinforcement is in danger of chloride corrosion it is possible to prevent this disadvantageous phenomenon through exposing the cover to the influence of an electric field. The forces of an electric field considerably reduce chloride ions in pore liquid in concrete, which helps to rebuild a passive layer on the surface of the reinforcement and stops corrosion. The process of removing chlorides can be described with multi-component diffusion equations. However, an essential parameter of these equations, the diffusion coefficient, can be determined on the basis of an inverse task. Since the solution was achieved for one-dimension flow, the method applied can be confirmed by experimental results and the material parameters of the process can be determined theoretically. Some examples of numerical calculations of the effective electro-diffusion coefficient of chloride ions confirmed the usefulness of the theoretical solution for generalizing experimental results. Moreover, the calculation process of the numerical example provides some practical clues for future experimental research, which could be carried out in close connection with the theoretical solution.

Key words: corrosion, diffusion, inverse task, removing chlorides, extraction.

1. Introduction

The durability of reinforced concrete structures decreases considerably when the reinforcement corrodes. The reinforcement is in danger of corrosion in structures located in an environment containing chloride ions or ions causing concrete carbonation. Chloride ions are particularly dangerous. These ions, present in antifreezes and seaside climate, cause considerable damage to elements of bridges, viaducts, tunnels, multi-floor garages and waterfront structures. The saturation of cover concrete with chloride ions results in steel de-passivation, which starts the corrosion process in the reinforcement. Chloride ions can be removed from concrete with an external electric field, which slows down the corrosion process and allows concrete to regain its protective properties. [1-8]. Laboratory research on the electrochemical extraction of chloride ions and the re-alkalization process related to it started in 1973, and in 1987 this method was first used to repair an engineering object. A theoretical analysis of the process is presented in article [6]. It is based on Fick's classical diffusion equations and the Nernst-Planck equations for liquids.

This paper presents an attempt to determine a model of electrochemical chloride extraction based on the theory of a multicomponent body, which precisely explains the porous-capillary structure of concrete with pore liquid and ions present in it. The task has been simplified to three basic components of the process:

* To whom correspondence should be addressed

free chlorides, bound chlorides and ions produced during the decomposition of bound chlorides. A flow equation with a structure similar to a classical diffusion equation was obtained from partial equations of the mass and electric charge balance. This equation was used to formulate an inverse task, which made it possible to analytically determine the diffusion coefficient. The theoretical solution and experimental research results [4] were used to calculate the value of this coefficient for experimental purposes. The calculations were used to analyse the influence of averaged-in-time differences in chloride ion concentrations on the edges of the layer modelling the cover and the influence of the unsteadiness of the process and mass sources was simulated.

2. Electro-diffusion equations of the chloride extraction process

As has been mentioned before the possibility of electro-chemical concrete desalination has been tested in practice. A scheme of electro-chemical extraction is presented in Fig.1a. A concrete surface polluted with chlorides is covered with electrolyte with a metal net in it. The net is connected to the positive pole of a direct current source, and the reinforcement of the reinforced concrete element to the negative pole of the same source. The forces of the electric field make ions in the liquid present in the concrete to move. The negative ions, especially Cl^- and hydroxide OH^-, move towards the external anode, and sodium Na^+, potassium K^+ and calcium Ca^{2+} cations, naturally present in the pore liquid, migrate towards the reinforcement (cathode). Moreover, water electrolysis and oxygen reduction take place on the cathode (reinforcement),

$$2H_2O + 2e^- \rightarrow 2OH^- + H_2,$$

$$H_2O + 0,5O_2 + 2e^- \rightarrow 2OH^-,$$

and water electrolysis and chloride release on the anode net

$$2H_2O \rightarrow +O_2 + 4H^+ \rightarrow 4e^-,$$

$$2Cl^- \rightarrow Cl_2 + 2e^-.$$

The model analysed boils down to a three-component body including components undergoing considerable changes during extraction - so called free chlorides, bound chlorides and products of the decomposition of bound chlorides. A diagram of a body modelling representative elementary volume (REV) X theoretically separated from the cover polluted with chlorides is presented in Fig.1b. This particle consists of: component 1 – chloride ions with a mass density of ρ^1, component 2 – bound chloride with a mass density of ρ^2, component 3 – calcium ions with a mass density of ρ^3. The other components, including the pore liquid, the congealed cement grout and the aggregate, are considered to be the skeleton (component 0) with a dominant mass density of ρ^0.

The electric field causes a partial decomposition of bound chlorides (component 2) and makes the chloride ions (component 1) and the calcium ions (component 3) move through the pore solution in the concrete. Components 1 and 3 move in the pore system at the speeds of $\boldsymbol{v}^1$ and $\boldsymbol{v}^3$. These speeds are distributed onto the speeds of the mass centre weight and mass w and the diffusion speeds $\boldsymbol{u}^1$ and $\boldsymbol{u}^3$ – Fig.1c.

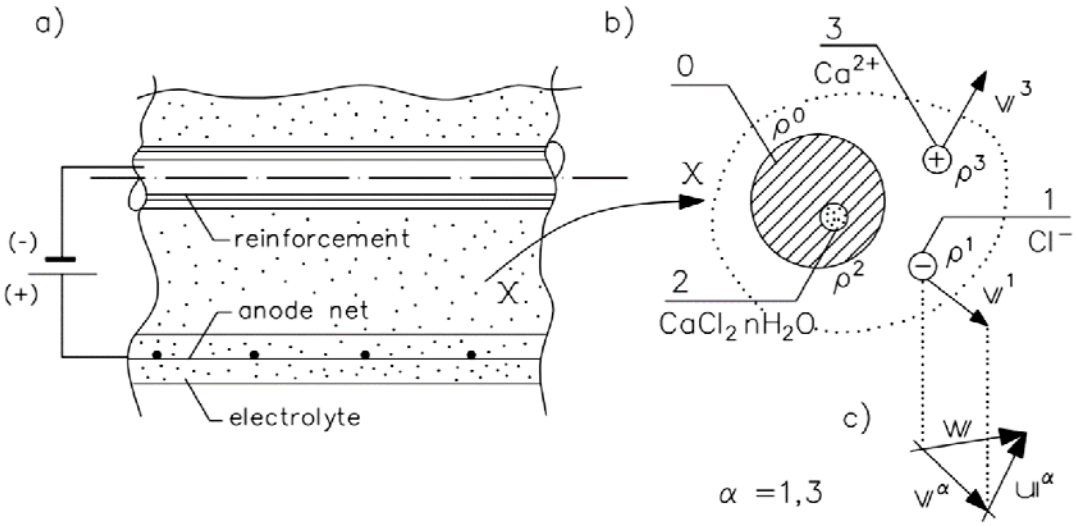

Fig.1. Model of chloride extraction.

Component 2 deposited on the pore walls (in the skeleton) is stationary. As a result of ion migration the transfer of mass and electrical charge takes place. The skeleton, which has a very large mass in comparison to the other components, is stationary and serves as a reference system for these transfers. The transfers of ions, considered to be one-directional, are described by a system of differential equations obtained in accordance with partial equations of the mass balance

$$\frac{\partial \rho^1}{\partial t} + \mathrm{div}\left(\rho^1 \boldsymbol{v}^1\right) = R^1, \xrightarrow{C^1} \rho \frac{\partial C^1}{\partial t} + \mathrm{div}\, \boldsymbol{j}^1 = R^1, \text{ - negative ion,} \tag{2.1}$$

$$\frac{\partial \rho^2}{\partial t} + 0 = R^2, \text{ – soluble component} \tag{2.2}$$

$$\frac{\partial \rho^3}{\partial t} + \mathrm{div}\left(\rho^3 \boldsymbol{v}^3\right) = R^3, \xrightarrow{C^3} \rho \frac{\partial C^3}{\partial t} + \mathrm{div}\, \boldsymbol{j}^3 = R^3 \text{ – positive ion} \tag{2.3}$$

Partial balances Eqs (2.1), (2.2), (2.3) when summed up lead to the principle of mass conservation

$$\frac{\partial \rho}{\partial t} + \mathrm{div}\left(\rho \boldsymbol{w}\right) = 0, \rightarrow \rho \boldsymbol{w} = \sum\nolimits_\alpha \rho^\alpha \vartheta^\alpha \approx 0 \rightarrow \rho = \mathrm{const}, \tag{2.4}$$

$$R^1 + R^2 + R^3 = 0. \tag{2.5}$$

Conditions for ion generation are described by the inequalities

$$R^2 < 0 \rightarrow R^1 + R^3 > 0 \qquad \text{and} \qquad \rho^2 < 0. \tag{2.6}$$

Electric charge is transferred together with the ions, which is described by the partial balances

$$\frac{\partial e^1\rho^1}{\partial t}\operatorname{div}\left(e^1\rho^1\boldsymbol{v}^1\right)=e^1R^1, \qquad \boldsymbol{u}^1\approx\boldsymbol{v}^1 \quad \text{and} \quad e^1\rho^1\boldsymbol{v}^1=e^1\boldsymbol{j}^1, \tag{2.7}$$

$$\frac{\partial e^3\rho^3}{\partial t}\operatorname{div}\left(e^3\rho^3\boldsymbol{v}^3\right)=e^3R^3, \qquad \boldsymbol{u}^3\approx\boldsymbol{v}^3 \quad \text{and} \quad e^3\rho^3\boldsymbol{v}^3=e^3\boldsymbol{j}^3. \tag{2.8}$$

After the sides of Eqs (2.7) and (2.8) are summed up, we obtain a dependence describing the principle of electric charge conservation

$$\frac{\partial(\rho e)}{\partial t}+\operatorname{div}(\mathrm{I})=0, \quad e^1R^1+e^3R^3=0, \quad e\rho=e^1\rho^1+e^3\rho^3 \quad \text{and} \quad \mathrm{I}=e^1\boldsymbol{j}^1+e^3\boldsymbol{j}^3. \tag{2.9}$$

Including the density of particular charges

$$C^1=\rho^1/\rho, \quad C^2=\rho^2/\rho, \quad C^3=\rho^3/\rho, \quad \rho=\rho^1+\rho^2. \tag{2.10}$$

The above dependences are reduced to the equations

$$\rho\left(\frac{\partial C^1}{\partial t}+\frac{\partial C^2}{\partial t}+\frac{\partial C^3}{\partial t}\right)+\operatorname{div}\left(\boldsymbol{j}^1+\boldsymbol{j}^3\right)=0, \tag{2.11}$$

$$\frac{\partial e\rho}{\partial t}=\operatorname{div}\left(e^1\boldsymbol{j}^1+e^3\boldsymbol{j}^3\right)=0. \tag{2.12}$$

These equations are complemented with physical equations describing ion flows

$$\boldsymbol{j}^1=-D^1\operatorname{grad}M^1, \quad \boldsymbol{j}^3=-D^3\operatorname{grad}M^3, \quad M^1=C^1+e^1\varphi, \quad M^3=C^3+e^3\varphi. \tag{2.13}$$

Then, the concentration of calcium ions C^3 is eliminated and the concentration of these ions is expressed with the concentration of chloride ions C^1 - C^3 (C^1)

$$\dot{C}^3=\frac{\partial C^3}{\partial C^1}\cdot\dot{C}^1=k\dot{C}^1, \quad \operatorname{grad}C^3=\frac{\partial C^3}{\partial C^1}\operatorname{grad}C^1=k\operatorname{grad}C^1. \tag{2.14}$$

Equations (2.11) and (2.12) are transformed to the final form of the equation of ion transport in a network of capillaries.

$$\varepsilon\frac{\partial C^1}{\partial t}+\lambda\frac{\partial C^2}{\partial t}=\operatorname{div}\left(D_{ef}\operatorname{grad}C^1\right). \tag{2.15}$$

Equation (2.15) is used in the next stage to formulate the inverse task, which provides the estimation of an effective diffusion coefficient.

3. The determination of an effective diffusion coefficient based on the inverse task

Research on the coefficient of chloride diffusion in concrete usually consists in measuring the mass flow in stationary conditions (in so called diffusion chambers). Moreover, the diffusion coefficient is calculated by equating the particular integral of the diffusion equation to experimentally determined distributions of chloride density – Cf. [9]. Both abovementioned methods are based on Fick's equations of one-body diffusion. While consistently describing the process of chloride extraction with equations of multi-body diffusion, an attempt was made to determine an effective diffusion coefficient on the basis of an inverse task. The solution involved a method prepared for calculating the thermal resistance of a wall and analysing measurement errors [10, 11] as well as determining the diffusion coefficient of water vapour in capillary materials, including sorption on the pore walls [12]. A diagram of flows which will be used for formulating the inverse task of the diffusion equation during chloride extraction is presented in Fig.2.

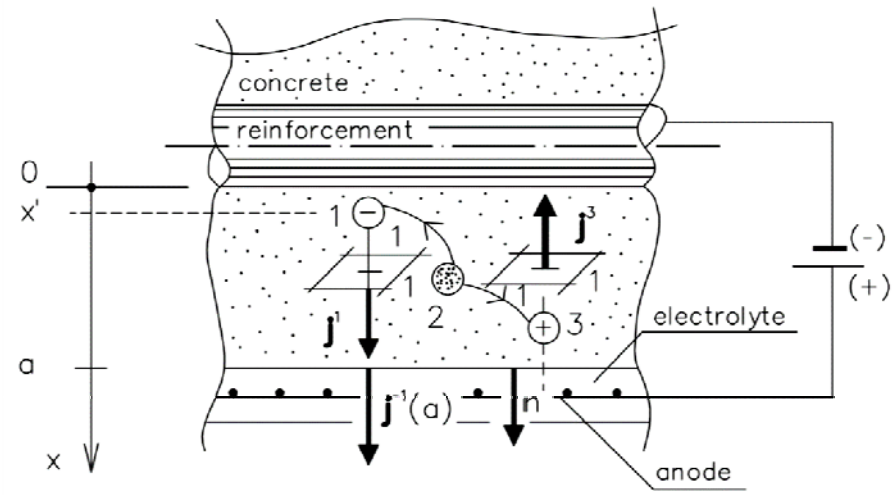

Fig.2. Diagram of flows used while formulating the inverse task.

The diffusion resistance Q_x of the concrete layer with a thickness of x' is taken into account, as well as the diffusion resistance Q of the whole cover

$$Q_x = \int_0^{x'} D_{ef}\left(x'\right)^{-1} dx', \qquad Q = \int_0^{a} D_{ef}\left(x'\right)^{-1} dx'. \tag{3.1}$$

Both sides of the flow Eq.(2.15) are multiplied by the quotient Q_x/Q and integrated twice (along the thickness of the cover and in time). In this way the correlation is obtained

$$\int_0^a \int_t^{t+\Delta t} \frac{Q_x}{Q}\left(\varepsilon \dot{C}^1 + \lambda \dot{C}^2\right) dx d\tau = \int_0^a \int_t^{t+\Delta t} \frac{Q_x}{Q} \frac{\partial}{\partial x}\left(D_{ef} \frac{\partial C^1}{\partial x}\right) dx d\tau. \tag{3.2}$$

After integrating and introducing average values the expression is obtained – Cf. [10, 12]

$$D_{ef} = \frac{1}{Q} = \frac{\bar{j}^1(a)\, n\, a \Delta t}{\left(\bar{C}^1(0) - \bar{C}^1(a)\right)\Delta t - \int_0^a Q_x \left(\varepsilon\left[C^1(x,t+\Delta t) - C^1(x,t)\right] + \lambda\left[C^2(x,t+\Delta t) - C^2(x,t)\right]\right) dx}. \tag{3.3}$$

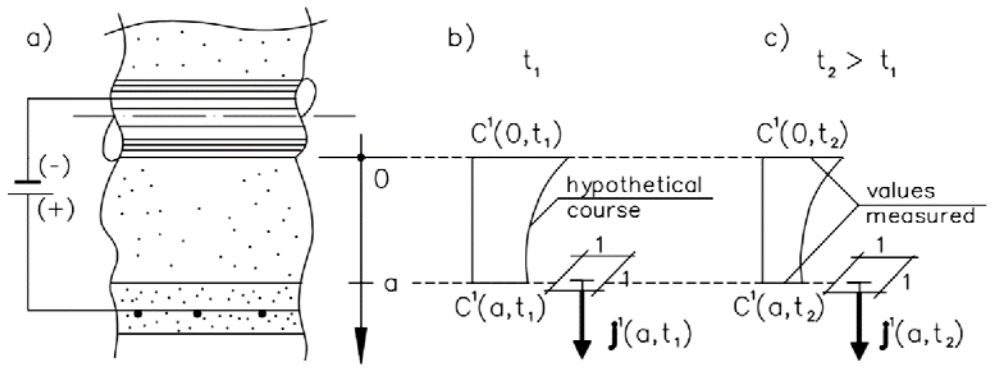

Fig.3. Instructions for experimental research on the diffusion coefficient of chloride extraction.

The first component in the denominator of this expression corresponds to the stationary stage of the flow of ions, and the second component (integral) describes the non-stationary part of the flow as well as the influence of the decomposition of bound chlorides. Dependence (3.3), introduced theoretically, explains the course of action during experimental research. The correct course of action consists in measuring at different times t_1 and t_2 the concentration of chloride ions on both edges of the layer modelling the cover and the values of the mass flow of chloride ions passing through the surface located on one edge – Fig.3. The influence of the non- stationary process and the effects of the mass sources can be examined through the numerical simulation of the integral in the denominator of expression (3.3).

3. Estimation of the value of the electro-diffusion coefficient in the process of chloride extraction

An attempt to determine the value of an effective electro-diffusion coefficient of chloride ions D_{ef} was made using research results [4]. During this research cylindrical samples of cement grout were used (*w/c =0.45*), containing an admixture of NaCl with a chloride concentration of *1*% in relation to the cement mass. The extraction took place in the migration chambers shown in Fig.4a. The bases of the sample touched the two chambers filled with a water solution of NaOH in which the electrodes were submerged. The strength of the electric current was *I = 40 mA*, and the duration of the process of chloride extraction was varied and ranged from 145 hours (6 days) to 600 hours (25 days). After the extraction the samples were cut parallel to the base into four discs, then the concentration of total chloride was determined in each disc. The division of the sample into discs is shown in Fig.4b. The coordinates of the rims of the discs and the edges of the three modelled layers are shown on the number line.

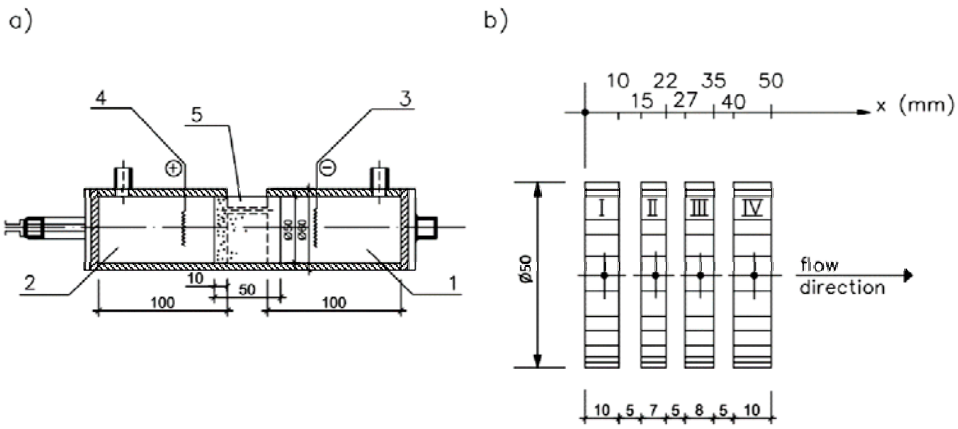

Fig.4. Diagram of experimental research [4] used in the numerical analysis: 1 – cathode chamber, 2 – anode chamber, 3 - cathode (Au), 4 – anode (Pt), 5 – sample.

The chloride mass density in particular discs ρ_{Cl}, was determined from the concentration values C_{Cl} presented in paper [4], assuming the cement mass $m_c = 1800 g/dm^3$

$$\rho Cl = c_{Cl} \cdot m_c. \tag{4.1}$$

Moreover, it was assumed that in the pore liquid there were calcium ions with an average mass of $\rho_{Ca} = 240 g/dm^3$.

The mass density of the body was approximated with the dependence

$$\rho(t) = \rho_{Cl} + \rho_{Ca}, \tag{4.2}$$

The concentration of chloride ions was determined with the formula

$$C^1 = \rho_{Cl} / \rho. \tag{4.3}$$

The mass densities of the components of the body and concentrations C^1 that were calculated are presented in Tab.1.

Table 1. Results of the calculations of mass density ρ_{Cl}, ρ [g/dm^3] and concentrations C^1 according to research [4].

Time h	Marking disc according to Fig.4b											
	I			II			III			IV		
	ρ_{Cl} $\frac{g}{dcm^3}$	ρ $\frac{g}{dcm^3}$	C^1	ρ_{cl} $\frac{g}{dcm^3}$	ρ $\frac{g}{dcm^3}$	C^1	ρ_{Cl} $\frac{g}{dcm^3}$	ρ $\frac{g}{dcm^3}$	C^1	ρ_{Cl} $\frac{g}{dcm^3}$	ρ $\frac{g}{dcm^3}$	C^1
0	*15.30*	*255.30*	*0.060*	*15.30*	*255.30*	*0.060*	*15.30*	*255.30*	*0.060*	*15.30*	*255.30*	*0.060*
145	*13.50*	*253.50*	*0.053*	*11,70*	*251.70*	*0.046*	*9,90*	*249.90*	*0.040*	*3,96*	*243.96*	*0.016*
290	*9.90*	*249.90*	*0.040*	*8.46*	*248.46*	*0.034*	*7.02*	*247.02*	*0.028*	*3.06*	*243.06*	*0.013*
475	*7.02*	*247.02*	*0.028*	*5.40*	*245.40*	*0.022*	*5.04*	*245.04*	*0.021*	*1.80*	*241.80*	*0.007*
600	*5.40*	*245.40*	*0.022*	*4.50*	*244.50*	*0.018*	*3.60*	*243.60*	*0.015*	*1.80*	*241.80*	*0.007*

Figure 5 presents the diagrams of changes in the density of chloride mass which were used to determine the mass Δm_{Cl} of chloride removed from particular discs. The points on the diagram correspond to the average mass density ρ_{Cl} determined in particular discs. It was assumed that the abovementioned points were situated in the middle of the thickness of the layers, and the change in mass density ρ_{Cl} is linear between these points. The area restricted with the constant diagram of mass thickness at the time t_0 and the diagrams of mass density ρ_{Cl} at the times t_1, t_2, t_3 and t_4 are determined by the chloride removed from the grout during the extraction.

The numerical values of the effective coefficient of ion diffusion D_{ef} were calculated from dependence (3.3) after determining the average mass flow of these ions according to the formula

$$\bar{j}^1(a) = \frac{\Delta m_{cl}}{A \cdot \Delta t}, \tag{4.4}$$

and assuming that edge concentrations $\bar{C}^l(0)$ and $\bar{C}^l(a)$ are equal to the concentrations in the furthest discs separated from the sample. The calculations were done in stationary conditions - D_{ef}^{st}, then an attempt was made to assess the influence of the non-stationary process and the distribution of bound chlorides. During the assessment it was taken into account that the integral component in expression (3.3) is the fraction α=*0.1÷0.5* of the component including the stationary process.

$$\int_0^a Q_x \left\{ \varepsilon \left[C^1(x,t+\Delta t) - C^1(x,t) \right] + \lambda \left[C^2(x,t+\Delta t) C^2(x,t) \right] \right\} dx = \alpha \cdot \Delta \bar{C}^1 \cdot \Delta t. \tag{4.5}$$

The results are shown in Tab.2 and Fig.6.

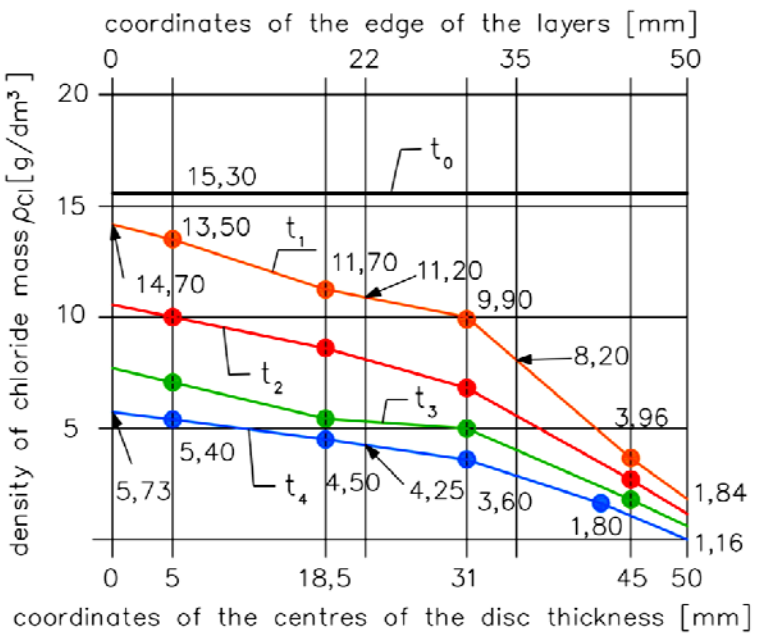

Fig.5. Density distribution of the total chloride mass in the cement grout with the indicator *w/c = 0.45* [4].

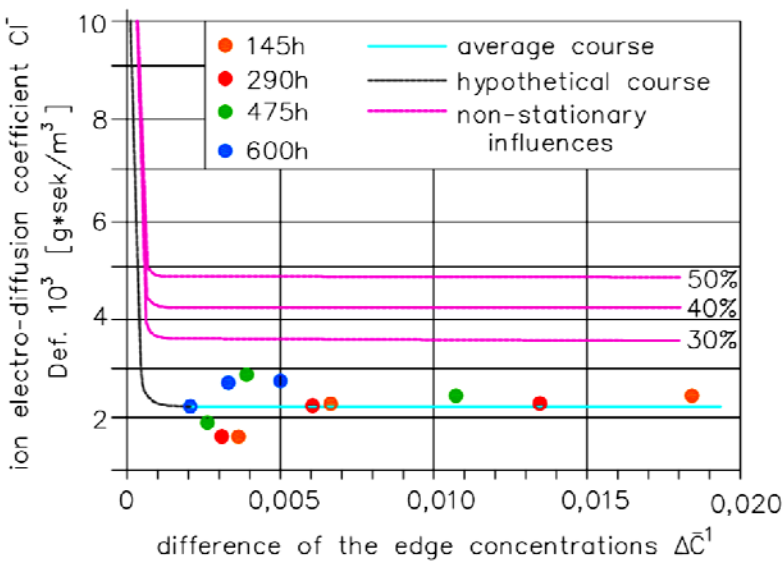

Fig.6. Diagram of the calculated values of the effective electro-diffusion coefficient of chloride ions.

Tab.2. Results of the calculations of the effective electro-diffusion coefficient of chloride ions according to research [4].

Time h	thickness $a[mm]$	$\Delta\bar{C}^1$	$D_{ef}^{(st)} \cdot 10^3 \left[\frac{g \cdot sek}{m^3}\right]$	$D_{ef}^{(st)} \cdot 10^3 \left[\frac{g \cdot sek}{m^3}\right]$				
				10%	20%	30%	40%	50%
145	50	0.0185	1.45	1.61	1.81	2.06	2.41	2.89
	35	0.0065	1.29	1.43	1.61	1.84	2.14	2.57
	22	0.0035	0.69	0.77	0.87	0.99	1.15	1.38
290	50	0.0135	1.35	1.50	1.68	1.93	2.25	2.70
	35	0.0060	1.33	1.48	1.66	1.90	2.22	2.66
	22	0.0030	0.72	0.80	0.90	1.03	1.20	1.44
475	50	0.0105	1.46	1.62	1.83	2.09	2.44	2.92
	35	0.0035	1.94	2.15	2.42	2.77	3.23	3.88
	22	0.0030	0.85	0.94	1.06	1.21	1.41	1.69
600	50	0.0075	1.77	1.97	2.22	2.53	2.95	3.55
	35	0.0035	1.75	1.93	2.17	2.48	2.90	3.48
	22	0.0020	1.15	1.28	1.44	1.65	1.92	2.31

The averaged values of the mass flow of chloride ions determined in subsequent time intervals showed that the extraction process had been non-specific in character throughout the whole cycle of the experiment [4]. After the experiment there was still *30%* of the initial chloride mass in the grout structure. The relatively large remainder of bound chloride indicates that it can be decomposed if the experiment is continued and that the process will go on in the non-stationary phase.

The experimentally determined difference between edge concentrations [4] was within the range $\Delta\bar{C}^1 = 0.0020 \div 0.0185$, and the calculated values of the effective electro-diffusion coefficient in a specific state were close to the average value $D_{ef}^{(st)} \cong 1.131 \cdot 10^{-3}\, g \cdot sec / m^3$ - cf. Fig.6. It was not possible to obtain even a single coefficient value when the difference between edge concentrations was small. The diagram in Fig.6 suggests that when the difference between edge concentrations is $\Delta\bar{C}^1 > 0.0020$ the solution is stable, and unstable results can be expected when the difference $\Delta\bar{C}^1 < 0.0020$.

5. Conclusions

The extraction of chloride ions from the concrete of reinforced concrete structures whose reinforcement is in danger of corrosion makes it possible to improve the durability of objects of road infrastructure. Although this modern method of protecting reinforced concrete structures against corrosion has been used for nearly thirty years, parameters of the process determining the efficiency of this method are chosen intuitively. The parameters of particular importance include: the density of electric current, the difference of potentials between reinforcing bars and the external electrode, the concentration of free chlorides and bound chlorides and the duration of the process. The influence of these factors on the extraction of chlorides from concrete can be determined through a theoretical analysis, including data from experimental tests. This paper presents a proposition for such an analysis, carried out on the basis of the multi-body theory. The use of the theory of multi-body diffusion for describing the process of chloride extraction has provided a model which precisely represents the complex phenomenon taking place in the concrete pore liquid under the influence of an electric field. A body consisting of just three basic

components: chloride ions, bound chloride and calcium ions was used, then a flow equation was introduced, similar in form to the classic diffusion equation. This equation made it possible to determine the electro-diffusion coefficient of chloride ions through the solution of an inverse task. Calculations of the numerical values of the effective electro-diffusion coefficient, including the chloride mass density determined on the basis of the published experimental data indicate that the flow in the extraction process is unspecified in character. Values of the chloride electro-diffusion coefficient were variable over time, which indicates that bound chlorides were also removed from the concrete structure as the amount of free chlorides in the pore liquid decreased. Reliable numerical values of the electro-diffusion coefficient will then be used in the initial boundary value tasks of the equation of the flow of chlorides during their extraction from concrete. It will be possible to determine optimum process parameters on the basis of these equations.

Nomenclature

C^{α} – concentration of component $\alpha=1, 2, 3$

$\bar{C}^{1}(x=0)$ – average edge concentration of ions Cl^{-} at place $x=0$

$\bar{C}^{1}(x=a)$ – average edge concentration of ions Cl^{-} at place $x=a$

D_{ef} – effective diffusion coefficient of chloride ions

e^{α} – electric loads of ion mass units $\alpha=1, 2, 3$

I – total density of diffusion current

$\bar{\boldsymbol{J}}^{1}(a)$ – averaged chloride ion mass flow (component 1) passing through the surface of the edge of the cover ($x=a$)

$\boldsymbol{j}^{\alpha}$ – ion mass flow $\alpha=1, 2, 3$

R^{α} – sources of the mass of components $\alpha=1, 2, 3$

$\boldsymbol{u}^{\alpha}$ – diffusion speed

$\boldsymbol{v}^{\alpha}$ – speed of moving components ($\alpha=1, 3$)

$\boldsymbol{w}$ – speed of the centre of gravity of the mass of particle X

$\Delta_{m_{Cl}}$ – mass of chloride removed from the sample through extraction

ρ^{α} – density of the mass of component $\alpha=1, 2, 3$

ρ^{0} – density of the mass skeleton

References

[1] Elsener B., Molina M. and Böhni H. (1993): *The electrochemical removal of chlorides from reinforced concrete*. – Corrosion Science, vol.35, 5-8, pp.1563-1570.

[2] Jungwirth D., Grübl P. and Windisch A. (1991): *Elektrochemische Schutzverfahren für bewehrte Bauteile aus baupraktischer Sicht*. – Beton und Stahlbetonbau vol.86, H, No.7, pp.167–171.

[3] Mietz J. (1993): *Elektrochemische Schutzverfahren zur Beseitigung von Korrosionsrisiken an Stahlbetonbauwerken*. – Bauingenieur, vol.68, pp.533–538.

[4] Tritthart J., Pettersson K. and Sorensen B. (1993): *Electrochemical removal of chlorides from hardened cement paste*. – Cement and Concrete Research, vol.23, pp.1095-1104.

[5] Hansson I.L.H. and Hansson C.M. (1993): *Electrochemical extraction of chlorides from concrete Part I – A Qualitative model of the process*. – Cement and Concrete Research, vol.23, pp.1141-1152.

[6] Andrade C., Diez J.M., Alamàn A. and Alonso C. (1995): *Mathematical modelling of electrochemical chloride extraction from concrete*. – Cement and Concrete Research, vol.25, No.4, pp.727-740.

[7] Polder R.B., Walker R.J. and Page C.L. (1995): *Electrochemical desalination of cores from a reinforced concrete coastal structure*. – Magazine of Concrete Research, vol.47, pp.321–327.

[8] Alsabry A. and Wilmański K. (2011): *Iterative description of freezing and thawing processes in porous materials*. – ZAMM - Zeitschrift für Angewandte Mathematik und Mechanik, vol.91, No.9, pp.753-760.

[9] Ściślewski Z. (1999): *Protection of reinforced concrete structures*. – Warsaw: Arkady.

[10] Kossecka E. (1993): *Methodology for preparing measurement data while determining the thermal resistance of building walls*. – Materials IV Conference on Building Physics in Theory and Practice, pp.128-135, Łódź.

[11] Kossecka E. (1991): *Balance of simple thermal helios-heating systems and building walls over long time intervals*. – Civil Engineering Archives, Vol. XXXVII z. 2, pp.249-264.

[12] Kubik J. and Rybczyńska A. (1995): *Measuring the water diffusion coefficient with component absorption – inverse task*. – XLI Scientific Conference of the Civil Engineering Committee of the Polish Academy of Sciences and the Scientific Committee of the Polish Association of Construction Engineers and Technicians, Kraków-Krynica, pp.107-114.

Received: January 4, 2016

Revised: April 12, 2016